WELD FIELD IMMUNE M12

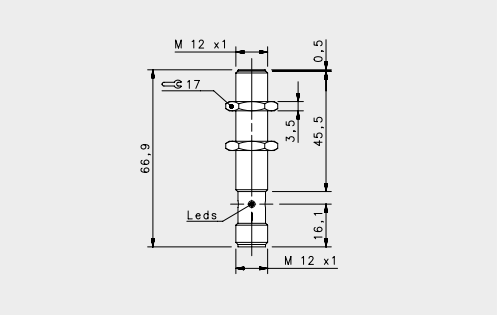

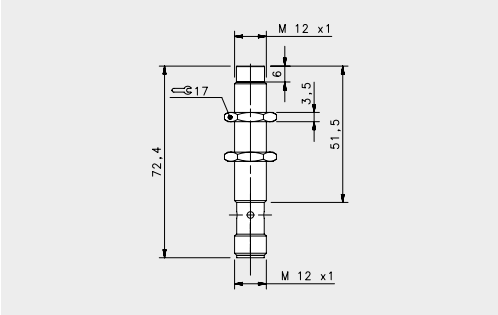

				FIELD IMMUNE STAINLESS STEEL	
				FLUSH	NON FLUSH
				M12 conn	M12 conn
NOMINAL SWITCHING DISTANCE				2 mm	4 mm
10-30 Vdc	PNP/NPN NO-NC	4 wires		---	---
			order No.	---	---
10-30 Vdc	PNP NO	3 wires		IS-F12-S1-S2	IS-F12-T1-S2
			order No.	95B065360	95B065370
10-30 Vdc	PNP NC	3 wires		---	---
			order No.	---	---
10-30 Vdc	NPN NO	3 wires		---	---
			order No.	---	---
10-30 Vdc	NPN NC	3 wires		---	---
			order No.	---	---
10-30 Vdc	PNP NO-NC	4 wires		---	---
			order No.	---	---
10-30 Vdc	NPN NO-NC	4 wires		---	---
			order No.	---	---
10-30 Vdc	NO-NC	2 wires		---	---
			order No.	---	---
20-250 Vac/Vdc	NO	2 wires		---	---
			order No.	---	---
20-250 Vac/Vdc	NC	2 wires		---	---
			order No.	---	---
20-250 Vac	NO	2/3 wires		---	---
			order No.	---	---
10-30 Vdc	Analog 0-20 mA	3 wires		---	---
			order No.	---	---
NAMUR amplifier	NAMUR	2 wires		---	---
			order No.	---	---

Nominal Voltage	10-30 Vdc	10-30 Vdc
Residual Ripple	< 10%	< 10%
Hysteresis	< 15%	< 15%
Max. Output Current	200 mA	200 mA
Min. Output Current	< 10mA	< 10mA
Residual Current	< 0,1 mA	< 0,1 mA
Voltage Drop	< 1,5V	< 1,5V
Operation Led	Present	Present
Switching Frequency	2000 Hz	1000 Hz
Start Up Delay	< 0,1 ms	< 0,1 ms
Repeatability	< 1%	< 1%
Short Circuit Protection	Present (self-resetting)	Present (self-resetting)
Electric Protection	Against polarity reversal inductive loads	Against polarity reversal inductive loads
Temperature Limit	(-25 ... +70 °C)	(-25 ... +70 °C)
Protection Degree	IP67	IP67
Cable Length	---	---
Cable Section	---	---
Housing Material	Stainless-Steel	Stainless-Steel
Active face	PTFE	PTFE
Tightening torque	10 Nm	10 Nm
Weight - Cable Output	---	---
Weight - Connector Output	25g	23g

WELD FIELD IMMUNE M18

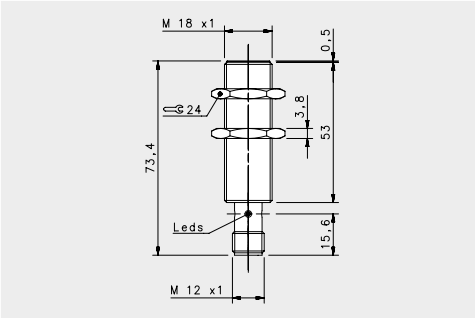

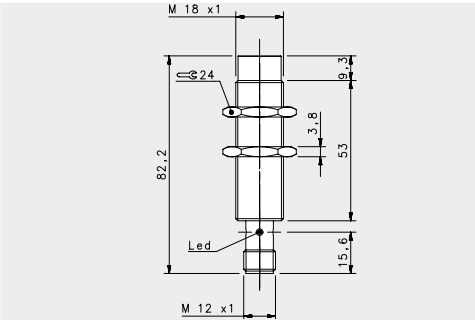

				FIELD IMMUNE STAINLESS STEEL	
				FLUSH	NON FLUSH
				M12 conn	M12 conn
NOMINAL SWITCHING DISTANCE				5 mm	8 mm
10-30 Vdc	PNP/NPN NO-NC	4 wires		---	---
			order No.	---	---
10-30 Vdc	PNP NO	3 wires		IS-F18-S1-S2	IS-F18-T1-S2
			order No.	95B065380	95B065390
10-30 Vdc	PNP NC	3 wires		---	---
			order No.	---	---
10-30 Vdc	NPN NO	3 wires		---	---
			order No.	---	---
10-30 Vdc	NPN NC	3 wires		---	---
			order No.	---	---
10-30 Vdc	PNP NO-NC	4 wires		---	---
			order No.	---	---
10-30 Vdc	NPN NO-NC	4 wires		---	---
			order No.	---	---
10-30 Vdc	NO-NC	2 wires		---	---
			order No.	---	---
20-250 Vac/Vdc	NO	2 wires		---	---
			order No.	---	---
20-250 Vac/Vdc	NC	2 wires		---	---
			order No.	---	---
20-250 Vac	NO	2/3 wires		---	---
			order No.	---	---
10-30 Vdc	Analog 0-20 mA	3 wires		---	---
			order No.	---	---
NAMUR amplifier	NAMUR	2 wires		---	---
			order No.	---	---

Nominal Voltage	10-30 Vdc	10-30 Vdc
Residual Ripple	< 10%	< 10%
Hysteresis	< 15%	< 15%
Max. Output Current	200 mA	200 mA
Min. Output Current	< 10mA	< 10mA
Residual Current	< 0,1 mA	< 0,1 mA
Voltage Drop	< 1,5V	< 1,5V
Operation Led	Present	Present
Switching Frequency	1000 Hz	500 Hz
Start Up Delay	< 0,2 ms	< 0,5 ms
Repeatability	< 1%	< 1%
Short Circuit Protection	Present (self-resetting)	Present (self-resetting)
Electric Protection	Against polarity reversal inductive loads	Against polarity reversal inductive loads
Temperature Limit	(-25 ... +70 °C)	(-25 ... +70 °C)
Protection Degree	IP67	IP67
Cable Length	---	---
Cable Section	---	---
Housing Material	Stainless-Steel	Stainless-Steel
Active face	PTFE	PTFE
Tightening torque	30 Nm	30 Nm
Weight - Cable Output	---	---
Weight - Connector Output	94g	91g